DocuSign Envelope ID: 17EC9C75-4531-428F-8D3D-411DA04FD1FF

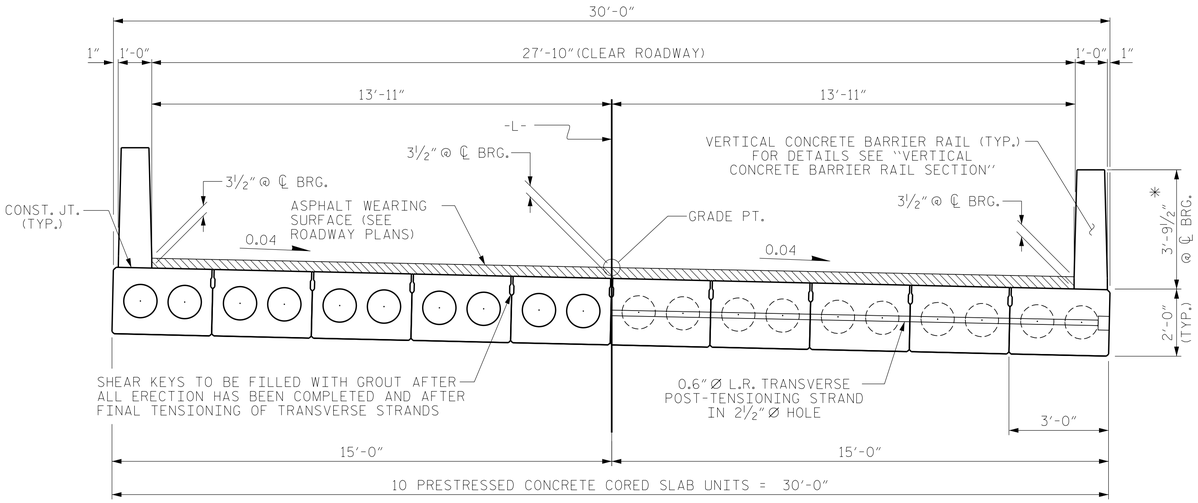

HALF SECTION THROUGH VOIDS

TYPICAL SECTION

HALF SECTION AT INTERMEDIATE DIAPHRAGMS

* - THE MAXIMUM BARRIER RAIL HEIGHT AND ASPHALT THICKNESS IS SHOWN. THE HEIGHT OF THE BARRIER RAIL AND ASPHALT THICKNESS VARIES WHILE THE TOP OF THE BARRIER RAIL FOLLOWS THE PROFILE OF THE GUTTERLINE. FOR RAIL HEIGHT DETAILS AND ASPHALT THICKNESS, SEE THE "VERTICAL CONCRETE BARRIER RAIL SECTION" DETAIL.

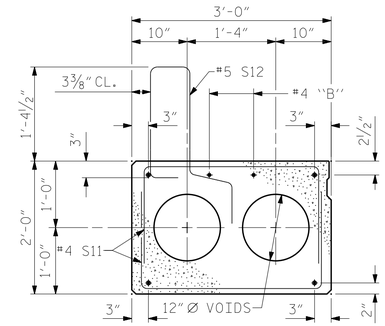

EXTERIOR SLAB SECTION

(FOR PRESTRESSED STRAND LAYOUT, SEE INTERIOR SLAB SECTION.)

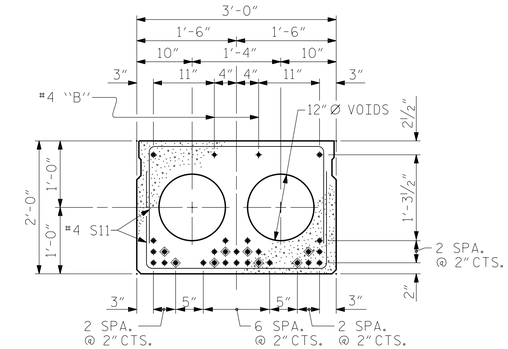

INTERIOR SLAB SECTION (70' UNIT)

(28 STRANDS REQUIRED)

0.6'' Ø LOW RELAXATION STRAND LAYOUT

◈ BOND SHALL BE BROKEN ON THESE STRANDS FOR A DISTANCE OF 12'-0" FROM END OF CORED SLAB UNIT. SEE STANDARD SPECIFICATIONS, ARTICLE 1078-7.

DEBONDING LEGEND

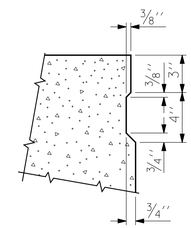

SHEAR KEY DETAIL

NOTE: OMIT SHEAR KEY ON OUTSIDE FACE OF EXTERIOR CORED SLABS.

FIXED END

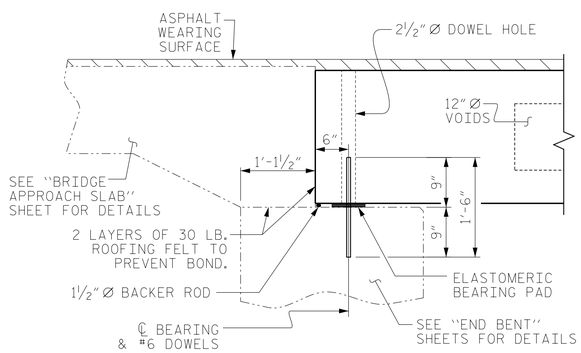

SECTION AT END BENT

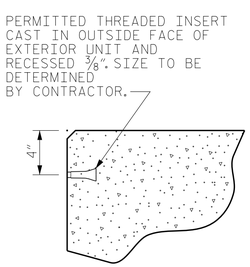

THREADED INSERT DETAIL

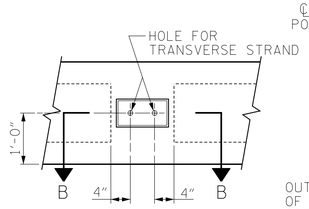

ELEVATION VIEW

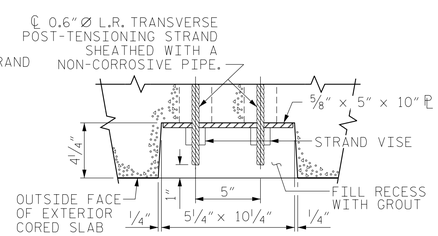

SECTION B-B

GROUTED RECESS AT END OF POST-TENSIONED STRAND • CORED SLABS

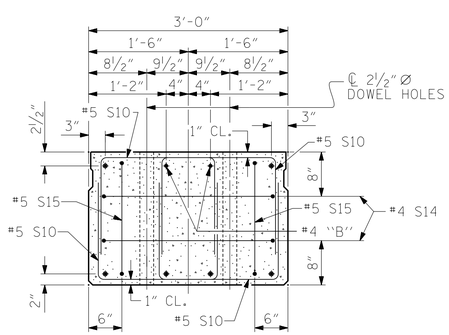

END ELEVATION

SHOWING PLACEMENT OF DOUBLE STIRRUPS AND LOCATION OF DOWEL HOLES. (STRAND LAYOUT NOT SHOWN.) INTERIOR SLAB UNIT SHOWN-EXTERIOR SLAB UNIT SIMILAR EXCEPT SHEAR KEY LOCATION.

NORTH CAROLINA PROFESSIONAL SEAL ENGINEER THOMAS PAUL GARRETT 018080 5/15/2018 9:59:56 AM PDT

DOCUMENT NOT CONSIDERED FINAL UNLESS ALL SIGNATURES COMPLETED

V&M Vaughn & Melton Consulting Engineers
Asheville, North Carolina 828-253-2796
Raleigh, NC 919-977-9455
Charlotte, NC 704-357-0488
Boone, NC 828-355-9933
Tri-Cities, TN 423-467-8401
Knoxville, TN 865-546-5800
Spartanburg, SC 864-574-4775
Charleston, SC 843-974-5650
Middlesboro, KY 606-248-6600
Atlanta, GA 770-627-3509
Copyright © 2006 Vaughn & Melton, Inc. All Rights Reserved

PROJECT NO. 17BP.1.R.77
GATES COUNTY
STATION: 17+05.00 -L-

SHEET 1 OF 3

STATE OF NORTH CAROLINA
DEPARTMENT OF TRANSPORTATION
RALEIGH

STANDARD

3'-0'' X 2'-0''
PRESTRESSED CONCRETE
CORED SLAB UNIT

REVISIONS						SHEET NO.
NO.	BY:	DATE:	NO.	BY:	DATE:	S-4
1			3			TOTAL SHEETS
2			4			13

ASSEMBLED BY :	WDC	DATE :	1-2018
CHECKED BY :	TPG	DATE :	3-2018
DRAWN BY : MAA	6/10	REV. 8/14	MAA/TMG
CHECKED BY : MKT	7/10		

3/27/2018
$$$$$$$$$$$$$$$$$$$$$$$$DGN$$$$$$$$$$$$$$$$$$$$$$$$
User:wdcrutcher

STD. NO. 24PCS4_30_90S