DocuSign Envelope ID: 17EC9C75-4531-428F-8D3D-411DA04FD1FF

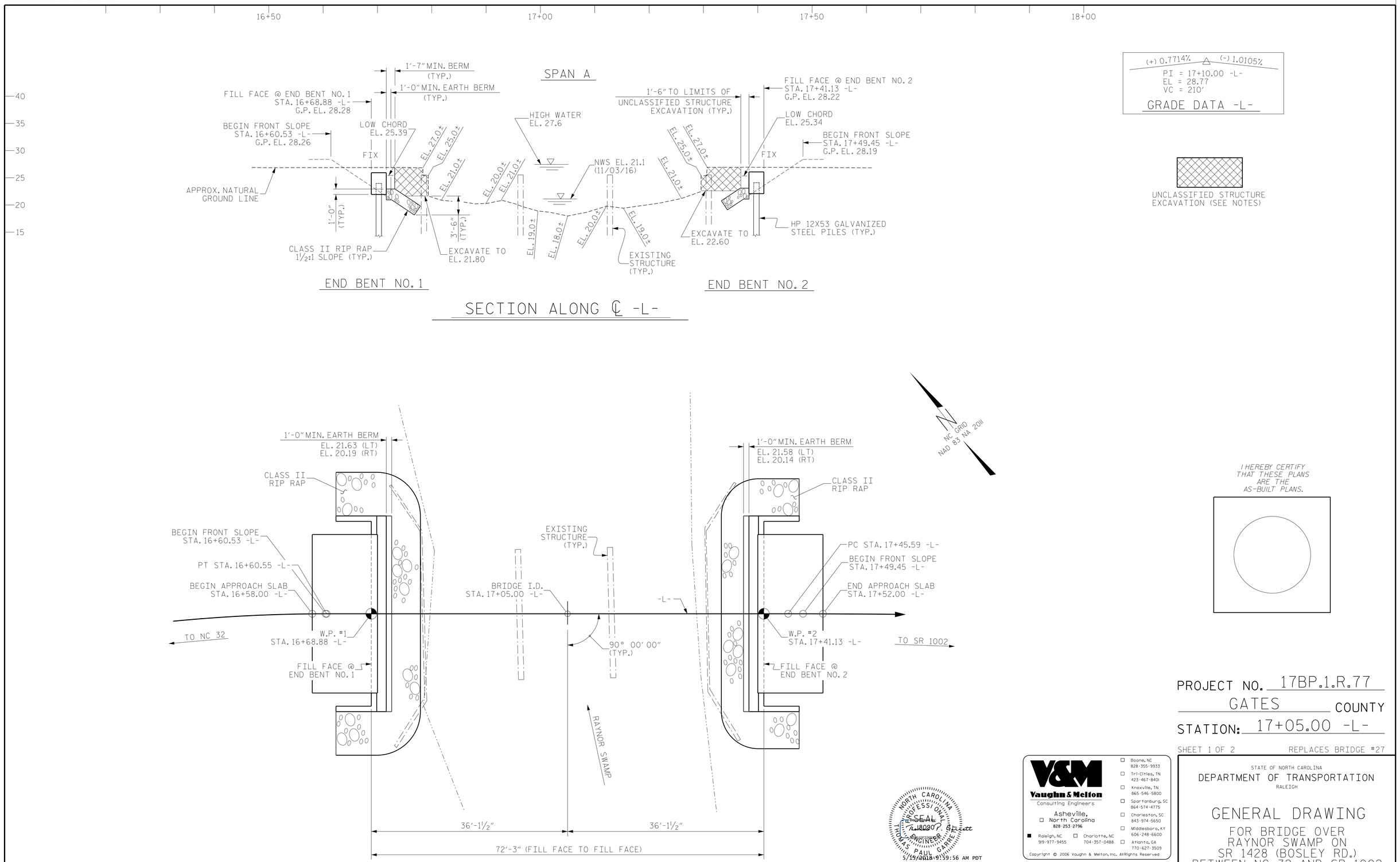

I HEREBY CERTIFY THAT THESE PLANS ARE THE AS-BUILT PLANS.

PROJECT NO. 17BP.1.R.77

GATES COUNTY

STATION: 17+05.00 -L-

SHEET 1 OF 2 REPLACES BRIDGE #27

NORTH CAROLINA PROFESSIONAL SEAL 018090 ENGINEER THOMAS PAUL GARRETT
5/15/2018 9:59:56 AM PDT

DOCUMENT NOT CONSIDERED FINAL UNLESS ALL SIGNATURES COMPLETED

V&M Vaughn & Melton Consulting Engineers
Asheville, North Carolina 828-253-2796
Raleigh, NC 919-977-9455 | Charlotte, NC 704-357-0488
Boone, NC 828-355-9933
Tri-Cities, TN 423-467-8401
Knoxville, TN 865-546-5800
Spartanburg, SC 864-574-4775
Charleston, SC 843-974-5650
Middlesboro, KY 606-248-6600
Atlanta, GA 770-627-3509
Copyright © 2006 Vaughn & Melton, Inc. All Rights Reserved

STATE OF NORTH CAROLINA
DEPARTMENT OF TRANSPORTATION
RALEIGH

GENERAL DRAWING

FOR BRIDGE OVER
RAYNOR SWAMP ON
SR 1428 (BOSLEY RD.)
BETWEEN NC 32 AND SR 1002

DWN. BY: WDC	DATE: 1/2018
CHKD. BY: TPG	DATE: 3/2017
DES. EGR. OF RECORD: JEB	DATE: 2/2018

REVISIONS						SHEET NO.
NO.	BY:	DATE:	NO.	BY:	DATE:	S-1
1			3			TOTAL SHEETS
2			4			13